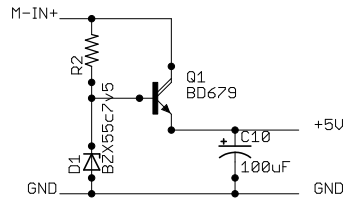

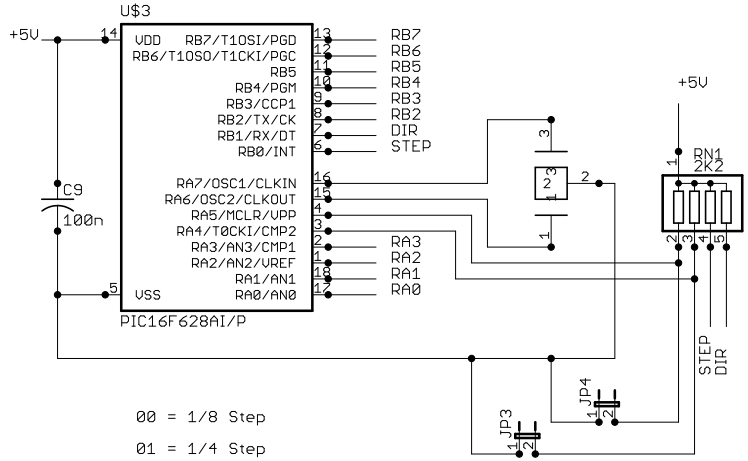

00 = 1/8 Step

01 = 1/4 Step

10 = 1/2 Step (Torq Comp)

11 = Full Step
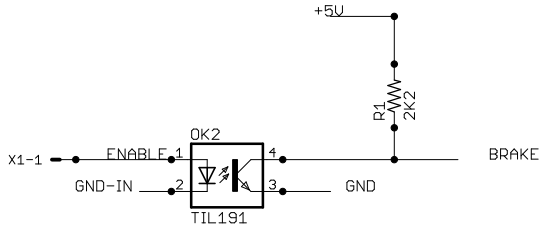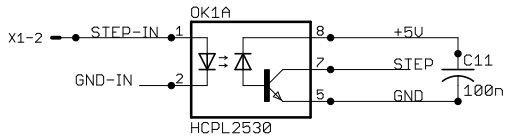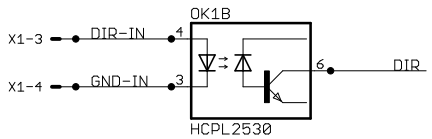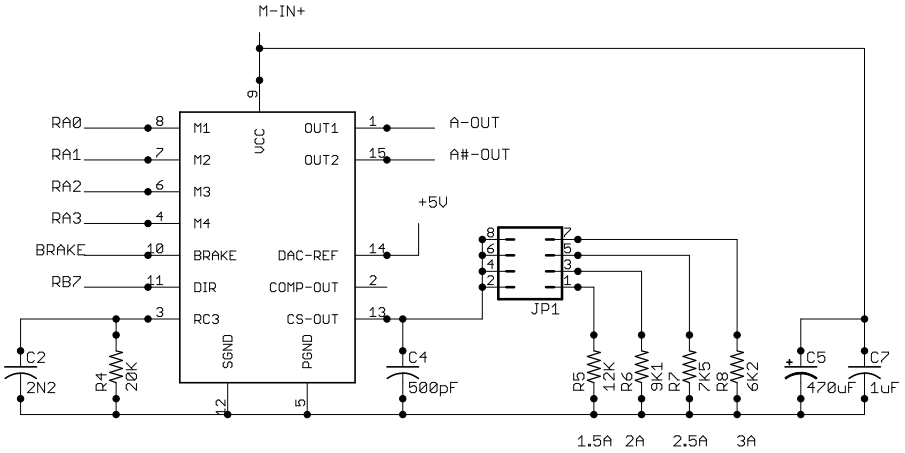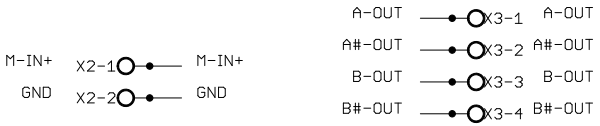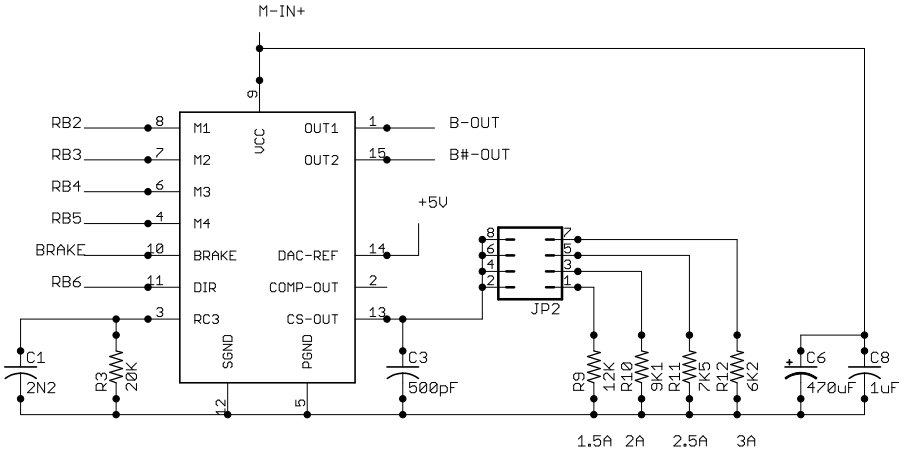
J3 and J4 select step mode